NOTES:

1 ALL DIMENSIONS SHOWN ARE FINISH OPERATIONAL DIMENSIONS WHICH INCLUDE RESIDUAL COATINGS UNLESS OTHERWISE SPECIFIED.

2 PART TO BE PACKED PROPERLY TO AVOID ANY DAMAGE WHILE SHIPPING & HANDLING.

3 ALL HORIZONTAL DIMENSIONS ARE SYMMETRICAL ABOUT CENTER LINE UNLESS OTHERWISE SPECIFIED.

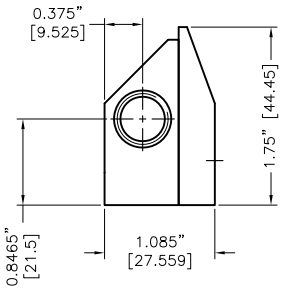

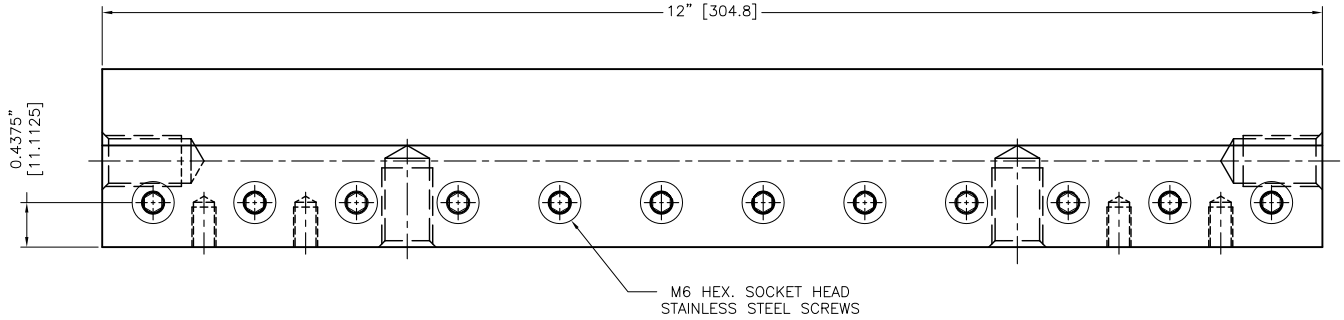

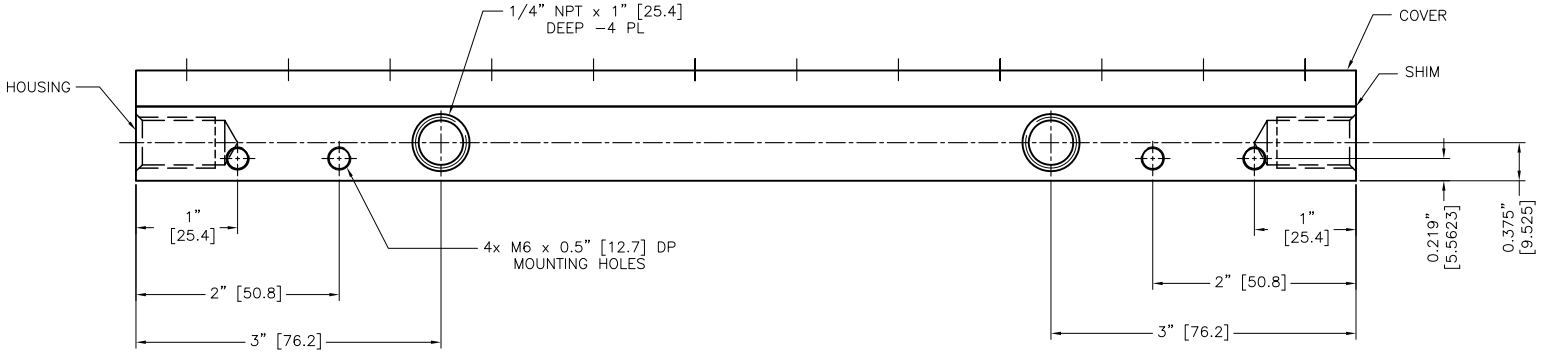

THIRD ANGLE PROJECTION

MATERIAL: ALUMINIUM

FINISH: –

NEXT ASSEMBLY	USED ON	QTY PER ASSY	PART NO
–	–	–	–
–	–	–	–
–	–	–	–
–	–	–	–
–	–	–	–
–	–	–	–
–	–	–	–
–	–	–	–
PART NO	–		

REQUIREMENTS–UNLESS OTHERWISE SPECIFIED

GENERAL

1. DIMS ARE IN INCHES (MM)
2. DIMENSIONING AND TOLERANCING IN ACCORDANCE WITH ANSI Y14.5 (1982)
3. MACHINE FINISH 125 MICRO INCH RMS
4. INTERNAL RADII .015
5. BREAK SHARP CORNERS .005 TO .015

LIMITS

1. LINEAR DIMS.
   .XXX = .005
   .XX = .010
   .X = .030
2. ANGLES = ± 1/2°
3. RUNOUT .010 TIR
4. HOLES IN ACCORDANCE WITH AND 10387

CONTRACT NUMBER	–
CLIENT	–
CONTRACTOR	–
DRAWN S.PATIL	DATE 27/11/2013
DESIGN –	CHECKED ASHISH
PROJECT –	Q.A. –
STRESS –	MANUFACTURING –
THERMAL –	MATERIALS –
MECHANISM –	ELECTRICAL –

NEX FLOW AIR PRODUCTS CORP.
10520 YONGE STREET, UNIT 35B-220, RICHMOND HILL, ON L4C 3C7
TEL: (416) 410-1313 & FAX: (416) 410-1806 www.nex-flow.com

TITLE: OUTLINE DRAWING OF 12" X-STREAM AIR BLADE AIR KNIFE

SIZE	CAGE CODE	DWG NO	RELEASE	REV
–	–	10012X	–	–

SCALE	CAD NO	SHEET	OF
1:1	XAK-12	1	1